Blankett: 053-201754-3

Rapid	SPARE PARTS LIST				
Reg. By KELE	Appr. By PETO	Appr. Date 1998-AUG-20	Page 8 (14)	Class 053	No. 197798	Rev. 4
Info		Product name **RAPID 105-106**				

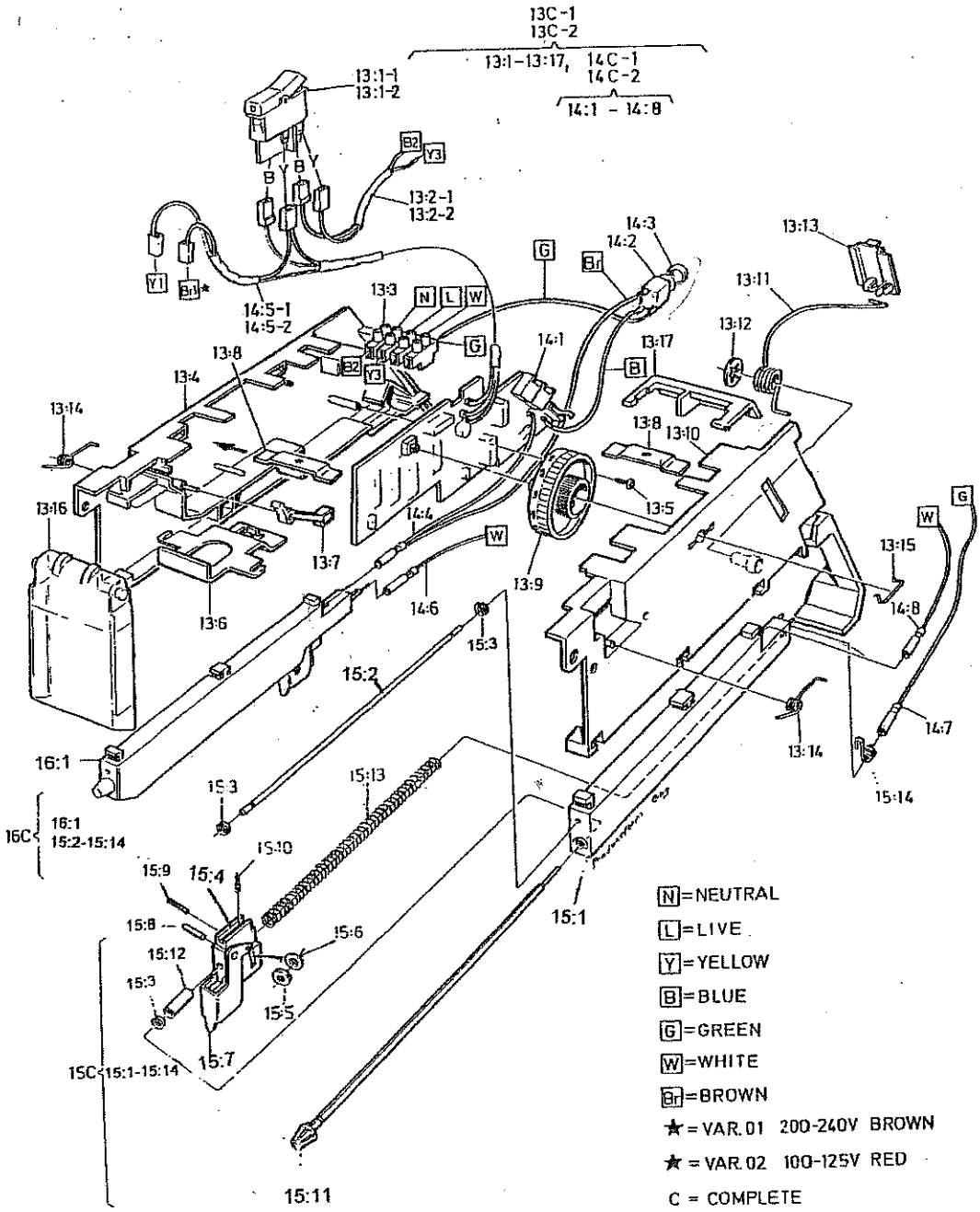

Parts are non-returnable